Ziegler

Redefine Innovative Metering

Technical Datasheet

ZAM MC10

ENERGY METERS COUNTER TYPE

www.ziegler-instrument.com

ZAM MC10

ENERGY METERS FOR SINGLE SOURCE APPLICATIONS

ZAM MC10 is kilowatt hour meter with counter mechanism, it measures active energy with class 1.0 accuracy. With several indications for 3 phase and 1 phase systems. It is ideal for energy measurement in industrial applications.

Product Features

- Accuracy Class 1.0
- Available in 3 phase 4 wire , 3 phase 3 wire and single phase version
- Indication: Healthy phase, Reverse Current
- Applicable to International Standards IEC 62053-21
- 7 Digit Auto-resttable mechanical counter
- True RMS measurement
- Fully programmable CT ratios
- Fully isolated current input
- Built in transient protection
- Pulse output: one potential free relay contact

Technical Specifications

Input Current	
Nominal input current	1A/5A AC RMS to be specified while ordering Start up current = 0.2% of rated current Maximum input current = **120% of nominal value**
System CT primary values	5A...9999 or 1A...9999A (programmable using thumwheels at the back of meter)
Input Voltage	
Three Phase :	110V L-L
	240V L-L
	415V L-L
	440V L-L.....120% of nominal value
Single Phase :	110V L-N
	240V L-N.....110% of nominal value
Auxiliary Supply	
AC Auxiliary Supply	Self Powered
VA Burden	
Nominal input voltage burden	< 15 VA approx. per phase
Nominal input current burden	< 0.2 VA approx. per phase
Operating Measuring Ranges	
Current	5A (0.25 to 6A) 1A (0.05 to 1.2A)

Voltage	Three Phase : 110V (85 to 130V) 240V (204 to 276V) 415V (330 to 470V) 440V (380 to 495V) Single Phase : 110V (99V to 121V) 240V (216V to 264V)
Power Factor	0.5 Lag ... 1...0.8 Lead
Frequency	45...55 Hz
Accuracy	
Active energy (kWh)	Class 1.0
Overload Withstand	
Current	20x for 1 second, repeated 5 times at 5 min
Counter	
Counter	7 digit electro-mechanical counter
Reading resolution	1 per kWh (for no multiplier)
Applicable Standards	
Energy measurement	IEC62053-21
Safety	IEC 61010-1-2010,Permanently connected use
IP for water & dust	IEC 60529
Pollution degree	2
Installation category	CAT III 300V ac rms
High Voltage Test	2.2 kV AC, 50Hz for 1 minute between all electrical circuits
Environmental	
Operating temperature	0 to+55°C
Storage temperature	-20 to+65°C
Enclosure	IP 54 (front face only)
Enclosure Cycle	
Enclosure style	96 X 96 DIN Quadratic
Enclosure material	Polycarbonate (Self extinguish & non dripping as per UL 94 V-0)
Terminals	M4 Screw Type
Fixing	4 side clamps

Reference Conditions for Accuracy	
Reference temperature	23°C +/- 2°C
Input waveform	Sinusoidal (distortion factor 0.005)
Input frequency	50 Hz ±0.3%
Auxiliary supply voltage	Rated Value ±1%
Auxiliary supply frequency	Rated Value ±1%
Voltage	±1% of rated value
Indication	
Indicator display	3 : Voltage phase monitoring, 3 : Reverse connected CT warning.
Pulse indicator	Red LED flashing at a rate proportional to measured power.
Dimensions	
Dimension	96mm high x 96mm wide x 80mm deep
Panel cutout	92mm x 92mm
Weight	320-400 gm

Connection Diagram and Installation

Input connections are made directly to shrouded screw clamp terminals. Numbering is clearly marked on the plastic molding. Choice of cable should meet local regulations. Terminals for both current and voltage inputs will accept up to two 12 AWG diameter cables.

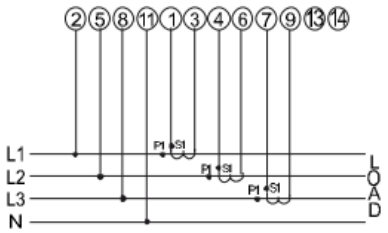

For 3 Phase 4 Wire Unbalanced Load

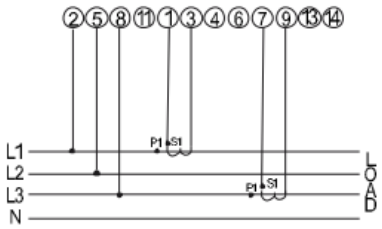

For 3 Phase 3 Wire Unbalanced Load

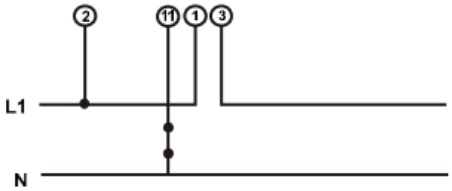

For Single Phase

Dimensions

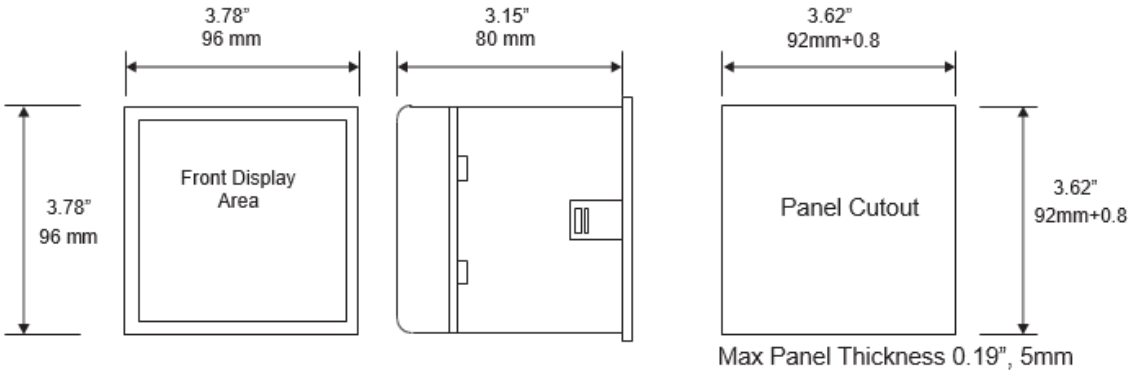
3.78"
96 mm
3.15"
80 mm
3.62"
92mm+0.8
3.78"
96 mm
Front Display
Area
Panel Cutout
3.62"
92mm+0.8
Max Panel Thickness 0.19", 5mm

Ziegler

Redefine Innovative Metering

Ziegler Instrumentation UK Ltd.

Central Buildings, Woodland close old woods Trading Estate, Torquay Devon, TQ2 7BB, United Kingdom

+441803 616 800 | info@ziegler-instrument.com | ziegler-instrument.com

Ziegler

Redefine Innovative Metering

Technical Datasheet

ZAM LE10

ENERGY METERS FOR SINGLE SOURCE APPLICATIONS

www.ziegler-instrument.com

ZAM LE10

ENERGY METERS FOR SINGLE SOURCE APPLICATIONS

ZAM LE10 is a single source energy meter suitable for single phase and three phase applications. Energy can be viewed over 8 digit LED display or view multiple electrical parameters via Modbus RS485

Product Features

- Accuracy Class 1.0
- Available in 3 phase 4 wire , 3 phase 3 wire and single phase version
- Indication: Healthy phase, Reverse Current
- Applicable to International Standards IEC 62053-21
- 8 Digit auto-ranging, auto-resettable seven segment LED display counter
- True RMS measurement
- Fully programmable CT & PT ratios
- On site programmable 3 phase 4 wire or 3phase 3 wire
- Fully isolated current input
- Built in transient protection
- Pulse output: one potential free relay contact
- Remote data reading through Modbus (RS 485)
- Programmable Energy format & Energy rollover count

Technical Specifications

Input Current	
Nominal input current	1A/5A AC RMS
System CT primary values	Std. values up to 4kA (1 or 5 Amp)
Starting current	0.4 % of In (In = Nominal Current)
Input Voltage	**PT Secondary Settable Range**
110V L-L (63.5V L-N)	100V – 120V L-L (57V – 69V L-N)
230V L-L (133V L-N)	121V – 239V L-L (70V – 139V L-N)
415V L-L (239.6V L-N)	240V – 480V L-L (140V – 277V L-N)
Auxiliary Supply	
AC Auxiliary Supply	110 V AC -15% /+20% 230 VAC -15% / +20% 380 VAC-15% / +20
ACDC Auxiliary Supply	100V... 250 VAC DC
DC Auxiliary Supply	12.....48 VDC
AC Auxiliary supply frequency range	45 to 66 Hz

VA Burden	
Nominal input voltage burden	< 0.2 VA approx. per phase
Nominal input current burden	< 0.6 VA approx. per phase
AC Supply burden	4 VA
Operating Measuring Ranges	
Current	5 ... 120% of rated value
Voltage	5 ... 120% of rated value
Power Factor	0.5 Lag ... 1...0.8 Lead
Frequency	40...70 Hz
Accuracy	
Active Power	±0.5% of range
Re-Active Power	±0.5% of range
Apparent Power	±0.5% of range
Power Factor/Phase Angle	1 % of Unity
Voltage	±0.5% of range
Current	±0.5% of range
Frequency	0.15% of mid frequency
Active energy (kWh)	1 % (IEC 62053-21) Active P.F. 0.5 lag... 1. 0.8 lead
Overload Withstand	
Voltage	2 x rated value for 1 second, repeated 10 times at 10 second intervals
Current	20x for 1 second, repeated 5 times at 5 min
Counter	
Counter	8 digit seven segment LED display
Reading resolution	Auto ranging
Display Height	9 mm
Applicable Standards	
EMC	IEC 61326 -1 :2005
Immunity	IEC 61000-4-3. 10V/m min – Level 3 industrial Low level
Safety	IEC 61010-1-2010,Permanently connected use
IP for water & dust	IEC 60529
Pollution degree	2
Installation category	CAT III 300V ac rms

High Voltage Test	2.2 kV AC, 50Hz for 1 minute between all electrical circuits
Environmental	
Operating temperature	-10 to +55°C
Storage temperature	-20 to +65°C
Relative humidity	0.....90% RH (non condensing)
Warm up time	Minimum 3 minute
Shock	15g in 3 planes
Vibration	10.....55 Hz, 0.15mm amplitude
Enclosure	IP 54 (front face only)
Enclosure Cycle	
Enclosure style	96 X 96 DIN Quadratic
Enclosure material	Polycarbonate (Self extinguish & non dripping as per UL 94 V-0)
Terminals	M4 Screw Type
Fixing	4 side clamps
Reference Conditions for Accuracy	
Reference temperature	23°C +/- 2°C
Input waveform	Sinusoidal (distortion factor 0.005)
Input frequency	50 or 60 Hz ±2%
Auxiliary supply voltage	Rated Value ±1%
Auxiliary supply frequency	Rated Value ±1%
Voltage	50.....100% of Nominal value
Current	10.....100% of Nominal value
Power	10.....100% of Nominal Current & 50.....100% of Nominal Voltage
Power Factor	0.5 lag....1... 0.8 lead
Indication	
Indicator display	3 : Voltage phase monitoring, 3 : Reverse connected CT warning.
Pulse indicator	Red LED flashing at a rate proportional to measured power.
Dimensions	
Dimension	96mm high x 96mm wide x 80mm deep

Panel cutout	92mm x 92mm
Weight	320-400 gm

Parameter Measurement

Sr No	Parameters	3 Phase 4Wire	3 Phase 3Wire	1 Phase 2Wire
1.	Active Energy (kWh) (8 digit resolution)	✓	✓	✓

Parameters through MODBUS

Sr No	Parameters	3 Phase 4 Wire	3 Phase 3 Wire	1 Phase 2 Wire
1.	Active Energy (Wh)	✓	✓	✓
2.	System Volts	✓	✓	✓
3.	System Current	✓	✓	✓
4.	Volts L1 – N	✓	×	×
5.	Volts L2 – N	✓	×	×
6.	Volts L3 – N	✓	×	×
7.	Volts L1 – L2	✓	✓	×
8.	Volts L2 – L3	✓	✓	×
9.	Volts L3 – L1	✓	✓	×
10.	Current L1	✓	✓	×
11.	Current L2	✓	✓	×
12.	Current L3	✓	✓	×
13.	Frequency	✓	✓	✓
14.	System Active Power (kW)	✓	✓	✓
15.	Active Power L1 (kW)	✓	×	×
16.	Active Power L2 (kW)	✓	×	×
17.	Active Power L3 (kW)	✓	×	×
18.	System Re-active Power (kVAr)	✓	✓	✓
19.	Re-active Power L1 (kVAr)	✓	×	×
20.	Re-active Power L2 (kVAr)	✓	×	×
21.	Re-active Power L3 (kVAr)	✓	×	×
22.	System Apparent Power (kVA)	✓	✓	✓
23.	Apparent Power L1 (kVA)	✓	×	×
24.	Apparent Power L2 (kVA)	✓	×	×

25.	Apparent Power L3 (kVA)	✓	×	×
26.	System Power Factor	✓	✓	✓
27.	Power Factor L1	✓	×	×
28.	Power Factor L2	✓	×	×
29.	Power Factor L3	✓	×	×
30.	System Phase Angle	✓	✓	✓
31.	Phase Angle L1	✓	×	✓
32.	Phase Angle L2	✓	×	×
33.	Phase Angle L3	✓	×	×
34.	Apparent Energy (VAh)	✓	✓	✓

Connection Diagram and Installation

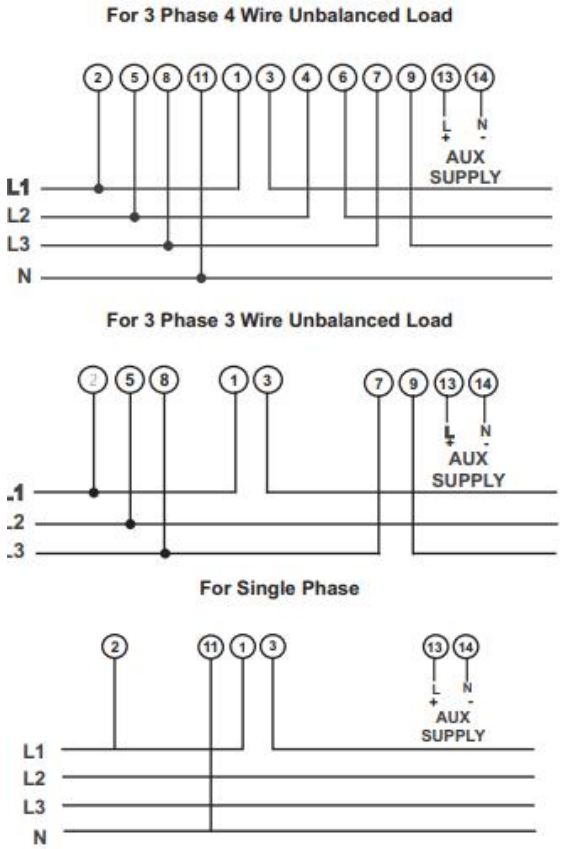

It is recommended that the wires used for connections to the instrument should have lugs soldered at the end. That is, the connections should be made with Lugged wires for secure connections. The Maximum diameter of the lug should be 7.0 mm and maximum thickness 3.5 mm. Permissible cross section of the connection wires: <= 4.0 mm^2 single wire or 2 × 2.5 mm^2 fine wire.

Dimensions

ZAM LE10

ENERGY METERS FOR SINGLE SOURCE APPLICATIONS

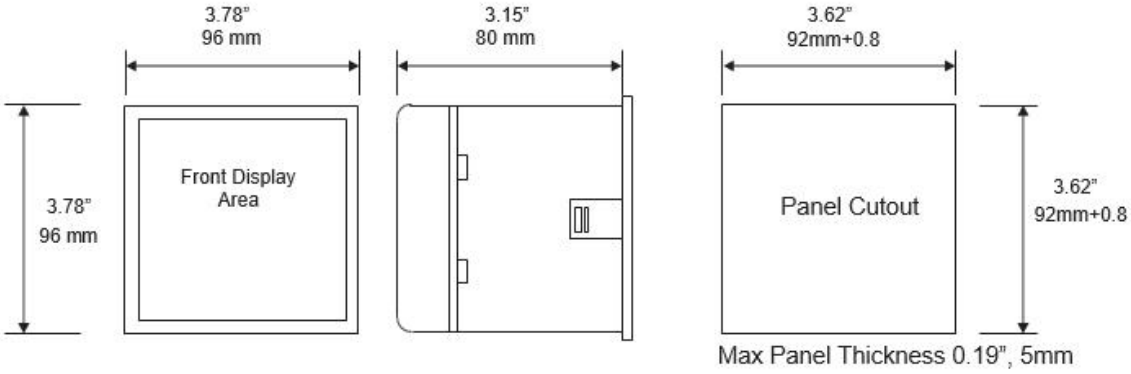

Ordering Information

Ordering information	(✓)
System Type (Connection network)	
3 Phase (programmable as 4 Wire or 3 Wire on site)	
1 Phase	
Input Voltage	
110V L-L (63.5V L-N)	
230V L-L (133V L-N)	
415V L-L (239.6V L-N)	
440V L-L (254V L-N)	
Input Current	
5 Amps	
1 Amps	
AC Auxiliary Voltage	
110 V AC -15% / +20%	
230 V AC -15% / +20%	
380 VAC-15% / +20 %	
AC/DC Auxiliary Supply Voltage	
100 – 250V AC/DC +/- 10%	
12V… 48V V DC +/- 10 %	
Optional:	
A I. MODBUS (RS485) output	
II. MODBUS Option not used	
B I. Pulse Output for energy measurement	
II. Pulse output used	
III. Pulse Output option not used	

Ziegler

Redefine Innovative Metering

Ziegler Instrumentation UK Ltd.

Central Buildings, Woodland close old woods Trading Estate, Torquay Devon, TQ2 7BB, United Kingdom

+441803 616 800 | info@ziegler-instrument.com | ziegler-instrument.com

Ziegler

Redefine Innovative Metering

Technical Datasheet

ZAM LE40

ENERGY METERS FOR DUAL SOURCE APPLICATIONS

www.ziegler-instrument.com

ZAM LE40

ENERGY METERS FOR DUAL SOURCE APPLICATIONS

Product Features

- **Dual Source Energy Measurements : ZAM LE40** features two energy integrator Utility & Generator
- **On site programmable PT/CT ratios:** It is possible to program primary of external potential Transformer (PT), primary of external Current Transformer (CT) on site locally via front panel keys by entering into Programming mode or remotely via MODBUS (RS485)
- **User selectable 3 phase 3W or 4W :** User can program on site the network connection as either 3 Phase 3 Wire or 4 Wire locally via front panel keys by entering into Programming mode or remotely via MODBUS (RS485). For single phase applications, single phase version is available.
- **Low back depth:** The instrument has very low back depth (behind the panel) of less than 80 mm in spite of optional features like pulse output Onsite
- **Selection of Auto scroll / Fixed Screen**
- **True RMS measurement**
- **High brightness 2 line 7 digits LED display:** Simultaneous displays Utility and Generator parameters.

- **Parameter Screen recall:** In case of power failure, the instrument memorizes the last displayed screen. The displayed screen will get memorized only if user keeps this screen for minimum 40 sec duration before power failure for fixed screen mode.
- **User Assignable Registers for MODBUS:** Customer can assign MODBUS register address as per his need for faster response time.
- **Hour Run, ON Hour, Number of Interruptions:** Hour run records the number of hours load is connected. ON Hour is the period for which the auxiliary supply is ON. Number of Interruptions indicates the number of times the Auxiliary Supply was interrupted. All these parameters are displayed in both utility & generator mode.
- **Energy Count storage:** In case of power failure, the instrument memorizes the last energy count. Every 40 sec, the instrument updates the energy counter in the non-volatile memory.
- **Programmable Energy format & Energy rollover count:** Customer can assign the format for energy display on MODBUS (RS485) in terms of Wh, kWh or MWh. Additional to this, customer can also set a rollover count from 7 to 13 digits (for Wh), 7 to 11 digits (for kWh) and 7 & 8 digits (for MWh), after which the energy will roll back to zero. The above settings are applicable for all types of energy.
- **Old Register :** This register holds the value before the last reset . The old value will be available when scrolled through screen.
- **Optional Pulse Output :** The instrument has optional pulse output one for Utility and another for Generator. The optional pulse output is a potential free, very fast acting relay contact which can be used to drive an external mechanical counter for energy measurement.
- **Enclosure Protection for dust and water:** conforms to IP 54 (front face) as per IEC60529
- **Compliance to International Safety standards :** Compliance to International Safety standard IEC 61010-1- 2001
- **EMC Compatibility :** Compliance to International standard IEC 61326.

ZAM LE40

ENERGY METERS FOR DUAL SOURCE APPLICATIONS

Technical Specifications

Input Voltage	
Nominal input voltage (AC RMS)	Phase-Neutral : 57.7 - 277V L-N Line-Line : 100 - 480V L-L
Max continuous input voltage	120% of nominal value
Input Current	
Nominal input current	1A/5A AC RMS
System CT primary values	From 1A to 9999A
Max continuous input current	120% of nominal value
Starting current	0.4 % of In (In = Nominal Current)
Auxiliary Supply	
ACDC Auxiliary Supply	100V… 250 VAC DC
DC Auxiliary Supply	12…..48 VDC
AC Auxiliary supply frequency range	45 to 66 Hz
VA Burden	
Nominal input voltage burden	< 0.2 VA approx. per phase
Nominal input current burden	< 0.6 VA approx. per phase
AC Supply burden	4 VA
Operating Measuring Ranges	
Current	5 … 120% of rated value
Voltage	5 … 120% of rated value
Power Factor	0.5 Lag … 1. 0.8 Lead
Frequency	40…70 Hz
Accuracy	
Active Power	±0.5% of range
Re-Active Power	±0.5% of range
Apparent Power	±0.5% of range
Power Factor/Phase Angle	1 % of Unity
Voltage	±0.5% of range
Current	±0.5% of range
Frequency	0.15% of mid frequency
Active energy (kWh)	1 % (IEC 62053-21) Active P.F. 0.5 lag… 1… 0.8 lead
Overload Withstand	
Voltage	2 x rated value for 1 second, repeated 10 times at 10 second intervals
Current	20x for 1 second, repeated 5 times at 5 min
Generator Sensor:	
	10 to 60 VDC / 20 to 300 VAC (For monitoring generator ON or OFF).
Applicable Standards	
EMC	IEC 61326 -1 :2005
Immunity	IEC 61000-4-3. 10V/m min – Level 3 industrial Low level
Safety	IEC 61010-1-2010,Permanently connected use
IP for water & dust	IEC 60529
Pollution degree:	2
Installation category:	CAT III 300V AC RMS

High Voltage Test	2.2 kV AC, 50Hz for 1 minute between all electrical circuits
Environmental	
Operating temperature	-10 to +55°C
Storage temperature	-20 to +65°C
Relative humidity	0.....90% RH (non condensing)
Warm up time	Minimum 3 minute
Shock	15g in 3 planes
Vibration	10.....55 Hz, 0.15mm amplitude
Enclosure	Ip54 (front face only)
Enclosure Cycle	
Enclosure style	96 X 96 DIN Quadratic
Enclosure material	Polycarbonate (Self extinguish & non dripping as per UL 94 V-0)
Terminals	M4 Screw Type
Fixing	4 side clamps
Reference Conditions for Accuracy	
Reference temperature	23°C +/- 2°C
Input waveform	Sinusoidal (distortion factor 0.005)
Input frequency	50 or 60 Hz ±2%
Auxiliary supply voltage	Rated Value ±1%
Auxiliary supply frequency	Rated Value ±1%
Voltage	50.....100% of Nominal value
Current	10.....100% of Nominal value
Power	10.....100% of Nominal Current & 50.....100% of Nominal Voltage
Power Factor	0.5 lag....1... 0.8 lead

Pulsed Output Option

Two optional pulse outputs are provided one for Utility and another for Generator

	Pulse Rate	
Divisor	Pulse	System power*
1	1 per Whr	Up to 3600W
	1 per kWhr	Up to 3600kW
	1 per MWhr	Above 3600kW
10	1 per 10 Whr	Up to 3600W
	1 per 10 kWhr	Up to 3600kW
	1 per 10 MWhr	Above 3600kW
100	1 per 100 Whr	Up to 3600W
	1 per 100 kWhr	Up to 3600kW
	1 per 100 MWhr	Above 3600kW
1000	1 per 1000 Whr	Up to 3600W
	1 per 1000 kWhr	Up to 3600kW
	1 per 1000 MWhr	Above 3600kW

Note: Divisor 10,100,1000 is applicable only when Energy Display on RS485 is selected in terms of Watts

*System Power = CT(Primary) x PT(Primary)

*System Power = 3xCT(Primary) x PT(Primary)L-N

*System Power = √3xCT(Primary)PT(Primary)L-L for Three Phase three wire

Pulse width = 60ms, 100ms, 200ms

PT Secondary Ranges for Various Input Voltage

Input Voltage	PT Secondary Settable Range
110V L-L (63.5V L-N)	100V – 120V L-L (57V – 69V L-N)
230V L-L (133V L-N)	121V – 240V L-L (70V – 139V L-N)
415V L-L (239.6V L-N)	241V – 480V L-L (140V – 277V L-N)

Parameter Measurement

Sr No	Parameters	3 Phase 4 Wire	3 Phase 3 Wire	1 Phase 2 Wire
1.	System Volts	✓	✓	✓
2.	System Current	✓	✓	✓
3.	Volts L1 – N	✓	×	×
4.	Volts L2 – N	✓	×	×
5.	Volts L3 – N	✓	×	×
6.	Volts L1 – L2	✓	✓	×
7.	Volts L2 – L3	✓	✓	×
8.	Volts L3 – L1	✓	✓	×
9.	Current L1	✓	✓	×
10.	Current L2	✓	✓	×
11.	Current L3	✓	✓	×
12.	Frequency	✓	✓	✓
13.	System Active Power (kW)	✓	✓	✓
14.	Active Power L1 (kW)	✓	×	×
15.	Active Power L2 (kW)	✓	×	×
16.	Active Power L3 (kW)	✓	×	×
17.	System Apparent Power (kVA)	✓	✓	✓
18.	Apparent Power L1 (kVA)	✓	×	×
19.	Apparent Power L2 (kVA)	✓	×	×
20.	Apparent Power L3 (kVA)	✓	×	×
21.	System Power Factor	✓	✓	✓
22.	Power Factor L1	✓	×	×
23.	Power Factor L2	✓	×	×

Sr No	Parameters	3 Phase 4 Wire	3 Phase 3 Wire	1 Phase 2 Wire
24.	Power Factor L3	✓	×	×
25.	Utility Import kWh	✓	✓	✓
26.	Utility Run Hour	✓	✓	✓
27.	Utility On Hour	✓	✓	✓
28.	Utility Number of Interruptions	✓	✓	✓
29.	Generator Import kWh	✓	✓	✓
30.	Generator Run Hour	✓	✓	✓
31.	Generator On Hour	✓	✓	✓
32.	Generator Number of Interruptions	✓	✓	✓
33.	Total Run Hour	✓	✓	✓
34.	Total On Hour	✓	✓	✓
35.	Old Utility Import kWh	✓	✓	✓
36.	Old Utility Run Hour	✓	✓	✓
37.	Old Utility On Hour	✓	✓	✓
38.	Old Utility Number of Interruptions	✓	✓	✓
39.	Old Generator Import kWh	✓	✓	✓
40.	Old Generator Run Hour	✓	✓	✓
41.	Old Generator On Hour	✓	✓	✓
42.	Old Generator Number of Interruptions	✓	✓	✓
43.	Old Total Run Hour	✓	✓	✓
44.	Old Total On Hour	✓	✓	✓
45.	Phase Reversal Indication	✓	✓	×

Parameters through MODBUS

Sr No	Parameters	3 Phase 4 Wire	3 Phase 3 Wire	1 Phase 2 Wire
1.	System Volts	✓	✓	✓
2.	System Current	✓	✓	✓
3.	Volts L1 – N	✓	×	×
4.	Volts L2 – N	✓	×	×
5.	Volts L3 – N	✓	×	×
6.	Volts L1 – L2	✓	✓	×
7.	Volts L2 – L3	✓	✓	×
8.	Volts L3 – L1	✓	✓	×
9.	Current L1	✓	✓	×
10.	Current L2	✓	✓	×
11.	Current L3	✓	✓	×
12.	Neutral Current	✓	×	×
13.	Frequency	✓	✓	✓
14.	System Active Power (kW)	✓	✓	✓
15.	Active Power L1 (kW)	✓	×	×
16.	Active Power L2 (kW)	✓	×	×
17.	Active Power L3 (kW)	✓	×	×
18.	System Re-active Power (kVAr)	✓	✓	✓
19.	Re-active Power L1 (kVAr)	✓	×	×
20.	Re-active Power L2 (kVAr)	✓	×	×
21.	Re-active Power L3 (kVAr)	✓	×	×
22.	System Apparent Power (kVA)	✓	✓	✓
23.	Apparent Power L1 (kVA)	✓	×	×
24.	Apparent Power L2 (kVA)	✓	×	×
25.	Apparent Power L3 (kVA)	✓	×	×
26.	System Power Factor	✓	✓	✓
27.	Power Factor L1	✓	×	×
28.	Power Factor L2	✓	×	×
29.	Power Factor L3	✓	×	×
30.	System Phase Angle	✓	✓	✓
31.	Phase Angle L1	✓	×	✓

32.	Phase Angle L2	✓	×	×
33.	Phase Angle L3	✓	×	×
34.	Import kWh (Utility /Generator)	✓	✓	✓
35.	kVAh (Utility /Generator)	✓	✓	✓
36.	Run Hour (Utility /Generator / Total)	✓	✓	✓
37.	On Hour (Utility /Generator / Total)	✓	✓	✓
38.	Number of Interruptions (Utility /Generator)	✓	✓	✓
39.	Old Import kWh (Utility /Generator)	✓	✓	✓
40.	Old Run Hour (Utility /Generator / Total)	✓	✓	✓
41.	Old On Hour (Utility /Generator / Total)	✓	✓	✓
42.	Old Number of Interruptions (Utility /Generator)	✓	✓	✓

Connection Diagram and Installation

For 3 Phase 4 Wire Unbalanced Load

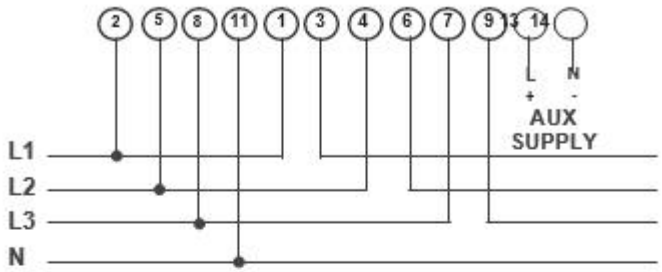

For 3 Phase 3 Wire Unbalanced Load

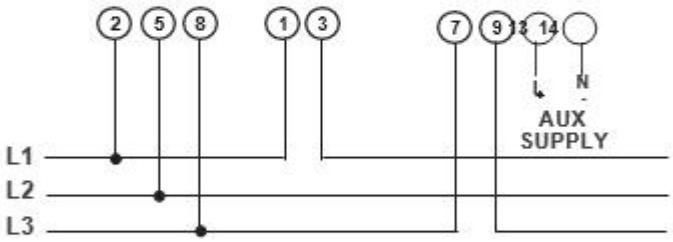

For Single Phase

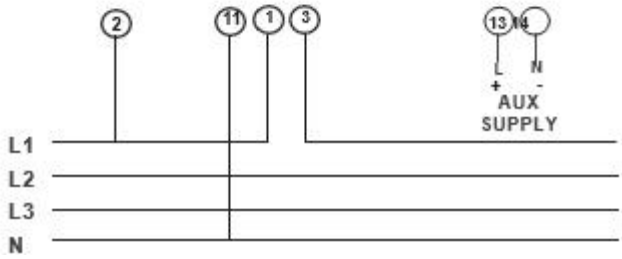

It is recommended that the wires used for connections to the instrument should have lugs soldered at the end. That is, the connections should be made with Lugged wires for secure connections. The Maximum diameter of the lug should be 7.0 mm and maximum thickness 3.5 mm.

Permissible cross section of the connection wires: <= 4.0 mm^2 single wire or 2 × 2.5 mm^2 fine wire.

Generator sense connection Diagram

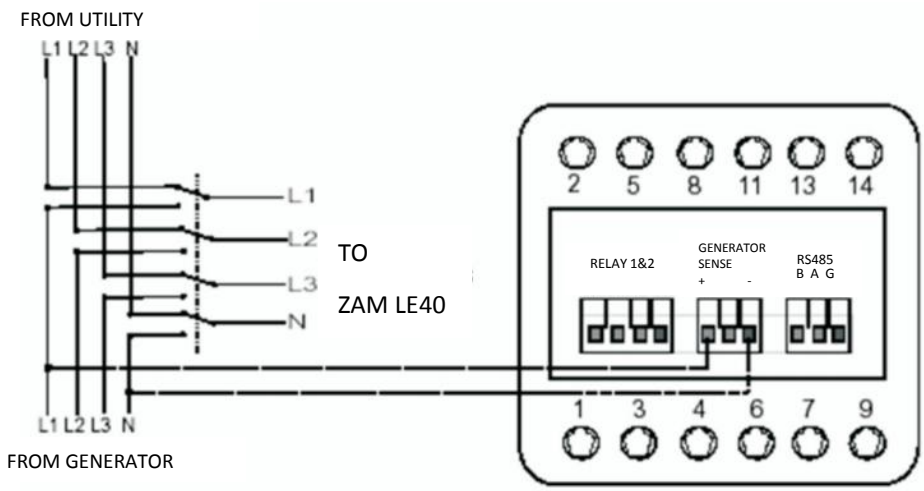

Dimensions

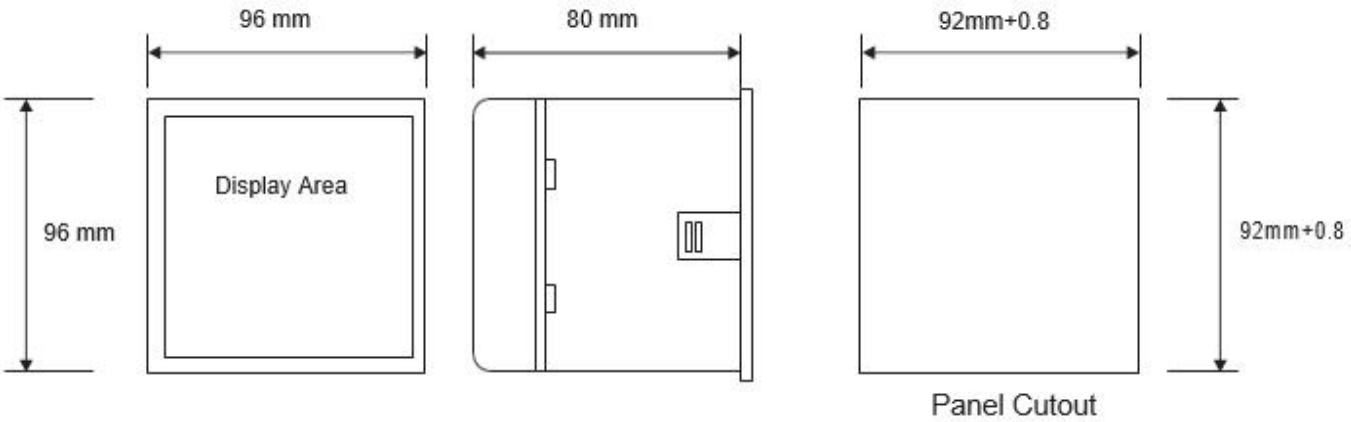

Ordering Information

Ordering information	(✓)
System Type (Connection network)	
3 Phase (programmable as 4 Wire or 3 Wire on site)	
1 Phase	
Input Voltage	
110V L-L (63.5V L-N)	
230V L-L (133V L-N)	
415V L-L (239.6V L-N)	
440V L-L (254V L-N)	
Input Current	
5 Amps	
1 Amps	
AC/DC Auxiliary Supply Voltage	
100 – 250V AC/DC +/- 10%	
12V… 48V V DC +/- 10 %	
Optional	
MODBUS (RS485) output	
MODBUS Option not used	
Pulse Output for energy measurement	
Pulse output (Utility / Generator)	
Pulse Output option not used	

ZAM LE40 3 Phase (programmable as 4 Wire or 3 Wire on site), 415V L-L (239.6V L-N), 1 Amps, 100 – 250V AC/DC +/- 10% Aux, MODBUS (RS485) output

Ziegler

Redefine Innovative Metering

Ziegler Instrumentation UK Ltd.

Central Buildings, Woodland close old woods Trading Estate, Torquay Devon, TQ2 7BB, United Kingdom

+441803 616 800 | info@ziegler-instrument.com | ziegler-instrument.com

Ziegler

Redefine Innovative Metering

Technical Datasheet

ZAM LC40

ENERGY METER FOR DUAL SOURCE APPLICATIONS

www.ziegler-instrument.com

ZAM LC40

ENERGY METER FOR DUAL SOURCE APPLICATIONS

ZAM LC40is a Dual Source Energy Meter whichmeasures important electrical parameters of Electrical supply received from Utility and a back-up source of supply the Diesel Generator in 3 phase and 1 phase network & replaces the need of multiple analog panel meters. It measures electrical parameters like Active / Reactive / Apparent energy and power. The instrument has 2 configurable optional outputs as pulse output for energy measurement or limit output.

Product Features

- Dual Source Energy Measurement as per IEC 62053:
  - Independent Energy counter for Generator and Utility
  - Generator sense signal (10 to 60VDC/20 to 300VAC) to measure Active energy (kWh), Reactive energy (kVArh), Apparent energy (kVAh) measurement
- THD Measurement : The instrument measures THD per phase voltage & current up to 15th Harmonic.
- On-site programmable:
  - On-site Programmable System Configuration 3PH4W / 3PH3W / 1PH2W.
  - On-site Programmable CT ratios and PT ratios
- Low back depth : The instrument has very low back depth (behind the panel) of less than 35 mm.
- User Configurable Features : User can select any five or ten measurement screens which will be shown on display. Also back lit can be programmed to switched on or off.

- LCD Display with Back lit : LCD shows 3 Parameters at a glance.
- Parameter Screen recall : In case of power failure, the instrument memorizes the last displayed screen.
- Run Hour, ON Hour, Number of Interruptions: Run Hour records the number of hours load is connected. ON Hour is the period for which the auxiliary supply is ON. Number of Interruptions indicates the number of times the Auxiliary Supply was interrupted.
- Limit (Alarm) or Pulse Relay Output (Optional) :
  - Potential free, very fast acting relay contact
  - Configurable as pulse output which can be used to drive an external counter for energy measurement
  - Configurable as limit (alarm) switch
- Direct remote access via MODBUS with programmable baud rates up to 38.4kbps
- On-site selection of Auto scroll / Fixed Screen
- Enclosure Protection for dust and water : Conforms to IP 50 (front face) as per IEC60529
- Compliance to International Safety standards : Compliance to International Safety standard IEC 61010-1- 2010
- EMC Compatibility : Compliance to International standard IEC 61326

ZAM LC40

ENERGY METER FOR DUAL SOURCE APPLICATIONS

Technical Specifications

Input Voltage	
Nominal input voltage(ACRMS)	100 VL-L to 500 VL-L (57.7 VL-N to 290 VL-N)
System PTprimaryvalues	100VLLto1200kVLLprogrammableonsite.
Maxcontinuousinputvoltage	120% of nominalvalue
Input Current	
Nominalinputcurrent	1A/5A AC RMS
System CTprimaryvalues	From 1A to 9999A
Maxcontinuousinputcurrent	120% of nominalvalue
OverloadIndication	“-OL”>121%ofnominalvalue (for voltage andcurrent)
Auxiliary Supply	
ExternalHigherAux	60 V – 300V AC-DC (± 5% approx)
Higher AuxNominalValue	230VAC/DC 50/60 Hz for ACAux
ExternalLowerAux	20 V – 60V DC / 20 V – 40VAC
Lower AuxNominalValue	48 V DC / 24 V AC(50/60 Hz for ACAux)
AuxSupplyfrequency	45 to 65 Hzrange
VA Burden	
Nominalinputvoltageburden	< 0.3 VA approx. perphase
Nominalinputcurrentburden	< 0.3 VA approx. perphase
Auxiliary Supplyburden Withaddoncard Withoutaddoncard	 < 6 VAapprox. < 4 VAapprox.
Generator Sense	
ACvoltage	20... 300VAC
DCvoltage	10... 60VDC
Operating Measuring Ranges	
Current(EnergyMeasurement) (As per IEC 62053-21)	Starting current : 2mA for 1A & 10mA for 5A Range: 20mA to 1.2A for1A 100mAto6Afor5A
Voltage	50... 120% of nominalvalue
PowerFactor	0.5 Lag...1. 0.8Lead
Frequency	50Hz /60Hz
TotalHarmonicdistortion	0.....50%
Accuracy	
ReferenceConditions	23°C +/-2°C
ActiveEnergy	Class 1 as per IEC 62053 –21
ReactiveEnergy	Class 2 as per IEC 62053 –23
ApparentEnergy	Class1
ActivePower	±0.5%ofnominalvalueatcosø=1
Re-ActivePower	±1.0% of nominal value at sin ø =1
ApparentPower	±0.5% of nominalvalue
PowerFactor/PhaseAngle	±3°
Voltage	±0.5%ofnominalvalue
Current	±0.5%ofnominalvalue
Frequency	± 0.2% of midfrequency
THD (Voltage/Current)	±2.0%
Overload Withstand	
Voltage	2xNominalvaluefor1second,repeated10 times at 10

	secondintervals
Current	20 x Imax for0.5sec
Display Update Rate	
Responsetimetostepinput	1 secapprox.
Applicable Standards	
EMC	IEC 61326 -1:2005
Immunity	IEC61000-4-3.10V/mmin–Level3industrial Low level
Safety	IEC61010-1-2010,Permanentlyconnecteduse
IPforwater&dust	IEC60529
Pollutiondegree:	2
Installationcategory:	III
Isolation : ProtectiveClass	2
High Voltage Test Input+AuxVsSurface Input VsRemainingCircuit	 4kVRMS,50Hz,1min 2kVRMS,50Hz,1min
Environmental	
Operatingtemperature	-10 to+55°C
Storagetemperature	-20 to+65°C
Relativehumidity	0.....90% RH (noncondensing)
Warmuptime	Minimum 3minute
Shock (AsperIEC60068-2-27)	Half sine wave,Peakacceleration 30gn(300m/s^2),duration 18ms.
Vibration	10... 150. 10 Hz, 0.15mmamplitude
Numberofsweepcycles	10 peraxis.
Enclosure	IP 50 (front faceonly)
Interfaces	
ImpulseLed	For Energy Calibration atfront
Relay(Optional)	240VAC,5A(ConfiguredasLimitorPulseoutput)
ModBus(Optional)	RS485,max.1200m Baud rate : 4.8k,9.6k,19.2k,38.4k bps

ZAM LC40

ENERGY METER FOR DUAL SOURCE APPLICATIONS

Parameter Measurement

Sr No	Displayed Parameters	3 Phase 4Wire	3Phase 3Wire	1Phase 2Wire
1.	Utility Active Energy (kWh)	✓	✓	✓
2.	Generator Active Energy (kWh)	✓	✓	✓
3.	Utility Reactive Energy (kVArh)	✓	✓	✓
4.	Generator Reactive Energy (kVArh)	✓	✓	✓
5.	Apparent Energy (kVAh) (Utility & Generator)	✓	✓	✓
6.	System Active Power (kW)	✓	✓	✓
7.	Active Power L1 (kW)	✓	×	×
8.	Active Power L2 (kW)	✓	×	×
9.	Active Power L3 (kW)	✓	×	×
10.	System Re-active Power (kVAr)	✓	✓	✓
11.	Re-active Power L1 (kVAr)	✓	×	×
12.	Re-active Power L2 (kVAr)	✓	×	×
13.	Re-active Power L3 (kVAr)	✓	×	×
14.	System Apparent Power (kVA)	✓	✓	✓
15.	Apparent Power L1 (kVA)	✓	×	×
16.	Apparent Power L2 (kVA)	✓	×	×
17.	Apparent Power L3 (kVA)	✓	×	×
18.	System Power Factor	✓	✓	✓
19.	Power Factor L1	✓	×	×
20.	Power Factor L2	✓	×	×
21.	Power Factor L3	✓	×	×
22.	System Phase Angle	✓	✓	✓
23.	Phase Angle L1	✓	×	×
24.	Phase Angle L2	✓	×	×
25.	Phase Angle L3	✓	×	×
26.	Current Demand(Utility / Generator)	✓	✓	✓

ENERGY METER FOR DUAL SOURCE APPLICATIONS

Sr No	Displayed Parameters	3 Phase 4Wire	3Phase 3Wire	1Phase 2Wire
27.	kVA Demand(Utility / Generator)	✓	✓	✓
28.	kW Demand (Utility / Generator)	✓	✓	✓
29.	Max Current Demand(Utility & Generator)	✓	✓	✓
30.	Max kVA Demand(Utility & Generator)	✓	✓	✓
31.	Max kW Demand(Utility & Generator)	✓	✓	✓
32.	Run Hour (Utility & Generator & Total)	✓	✓	✓
33.	On Hour (Utility & Generator & Total)	✓	✓	✓
34.	Number of Interruptions (Utility & Generator)	✓	✓	✓
35.	System Voltage	✓	✓	✓
36.	Voltage L1	✓	×	×
37.	Voltage L2	✓	×	×
38.	Voltage L3	✓	×	×
39.	Voltage L12	✓	✓	×
40.	Voltage L23	✓	✓	×
41.	Voltage L31	✓	✓	×
42.	System Voltage THD	✓	✓	✓
43.	Voltage L1 THD	✓	✓	×
44.	Voltage L2 THD	✓	✓	×
45.	Voltage L3 THD	✓	✓	×
46.	System Current	✓	✓	✓
47.	Current L1	✓	✓	×
48.	Current L2	✓	✓	×
49.	Current L3	✓	✓	×
50.	System Current THD	✓	✓	✓
51.	Current L1 THD	✓	✓	×
52.	Current L2 THD	✓	✓	×
53.	Current L3 THD	✓	✓	×

ENERGY METER FOR DUAL SOURCE APPLICATIONS

Sr No	Displayed Parameters	3 Phase 4Wire	3Phase 3Wire	1Phase 2Wire
54.	Neutral Current	✓	×	×
55.	Frequency	✓	✓	✓
56.	RPM	✓	✓	✓
57.	Phase Reversal Indication	✓	✓	×
58.	Current Reversal Indication	✓	✓	✓
59.	Phase Absent Indication	✓	✓	×
60.	Old Utility Active Energy (kWh)	✓	✓	✓
61.	Old Generator Active Energy (kWh)	✓	✓	✓
62.	Old Utility Reactive Energy (kVArh)	✓	✓	✓
63.	Old Generator Reactive Energy (kVArh)	✓	✓	✓
64.	Old Apparent Energy (kVAh) (Utility & Generator)	✓	✓	✓
65.	Old Run Hour (Utility & Generator & Total)	✓	✓	✓
66.	Old On Hour (Utility & Generator & Total)	✓	✓	✓
67.	Old Number of Interruptions (Utility & Generator)	✓	✓	✓

Connection Diagram and Installation

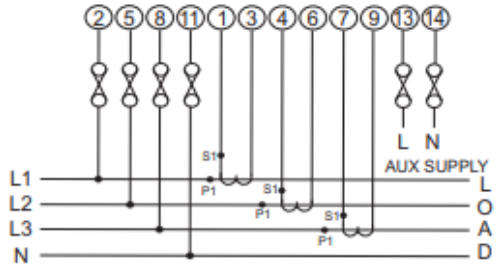

3 Phase 4 wire Unbalanced load

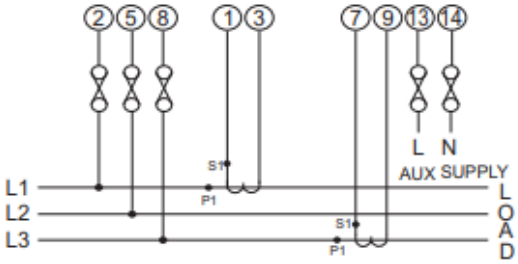

3 Phase 3 wire Unbalanced load

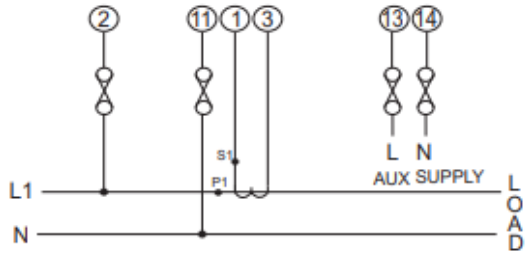

1 Phase 2 Wire

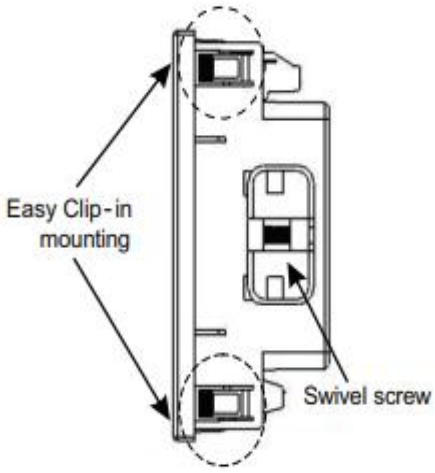

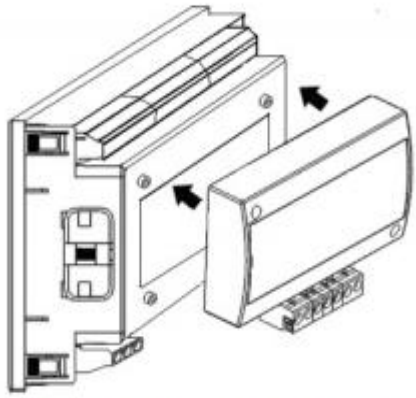

Optional Modbus/Pulse output pluggable module.

Dimensions

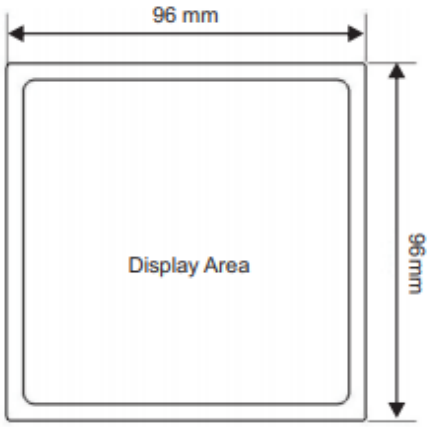

Front View

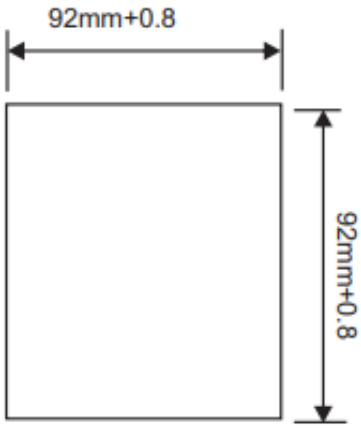

Panel Cutout

ENERGY METER FOR DUAL SOURCE APPLICATIONS

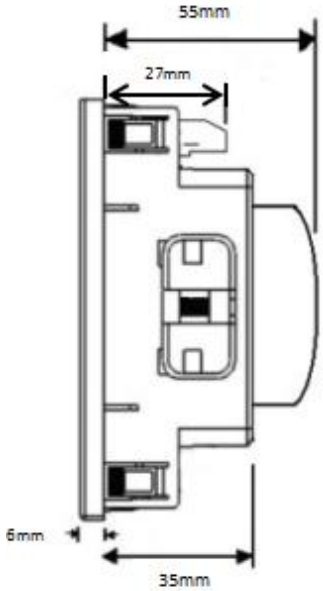

With Optional module

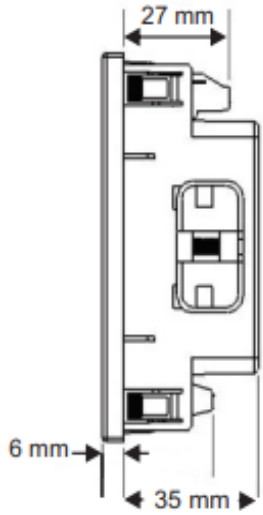

Without Optional module

Side view

Ordering Information

Ordering information	(✓)
System Type (Connection network)	
3 Phase (programmable as 4 Wire or 3 Wire on site)	
Auxiliary Supply Voltage	
60 - 300 V AC DC	
20 - 60 V DC / 20 - 40 V AC	
Optional	
A I. MODBUS (RS485) output	
II. MODBUS Option not used	
B I. Pulse Output- 1	
II. Pulse output- 2	
III. Pulse Output option not used	

ZAM LC40 1 Phase, 20 - 60 V DC / 20 - 40 V AC Auxiliary Supply Voltage, MODBUS (RS485) output, Pulse Output option not used.

Ziegler

Redefine Innovative Metering

Ziegler Instrumentation UK Ltd.

Central Buildings, Woodland close old woods Trading Estate, Torquay Devon, TQ2 7BB, United Kingdom

+441803 616 800 | info@ziegler-instrument.com | ziegler-instrument.com

Ziegler

Redefine Innovative Metering

Technical Datasheet

ZAM TC40

ENERGY METERS FOR DUAL SOURCE APPLICATIONS

ZAM TC40

ENERGY METERS FOR DUAL SOURCE APPLICATIONS

ZAM TC40 is a touchscreen dual source energy meter, measures important electrical parameters of Utility (in normal mode) & Generators (in Power back up) in three phase and single phase Network & replaces the multiple analog panel meters. It measures electrical parameters like AC current, Voltage, frequency, Active energy import. The instrument has optional pulse output as one for Utility and another for Generator.

Product Features

- **Dual Source Energy Measurements :**
  - Separate energy calculations for utility and generator
  - Forwarded energy calculations in case of current reversal
- **Direct Cost calculations:**
  - Separate direct cost calculations for utility and generator
  - Cycle wise Bar Graph representation of Generator Energy Consumption
- **Power Quality Measurement:**
  - Measurable up to 56th (50Hz) / 46th (60Hz) harmonic on each phase. Maximum any 6 harmonics can be monitored simultaneously for each phase
  - Measurement of RMS value of fundamental and per phase voltage and current harmonics.
  - (%) THD of per phase voltage and current
  - Distortion factor of individual harmonics
- **Graphical Analysis:**
  - Per phase individual harmonic bar graph representation
  - Real time vector representation of all 3 Phases for complete system analysis
- **Energy class 0.5S as per IEC 62053 :**
  - Active energy (kWh), Fundamental Reactive energy (kVArh) & Apparent energy (kVAh) measurement.
  - Accuracy as per IEC 62053-22, IEC62053-23
  - Impulse for energy verification
- **Onsite programmable for user desired application:**
  - Onsite programmable input voltage (100VLL to 500 VLL), input current (1A or 5A) and system configuration (3 phase 4Wire (unbalanced) or 3phase 3Wire (unbalanced) network)
  - Onsite programmable CT ratio & PT ratio
  - Wide auxiliary power supply range: 60-300VAC/DC
- **Run Hour, ON Hour, Number of Interruptions:** Displays parameters for both mode utility and generator
- **Old Register:** This register holds the value before the last reset. The old value will be available when scrolled through screen.
- **Time Of DAY (TOD / TOU):**
  - Easy programmable tariff schedule
  - 4 seasons, 4 tariff energy registers
  - 4 types of days and 6 time zones per day
  - automatic daily profile storage for a one day & one month
  - cost per kWh calculation
  - configurable billing date for monthly billing
- **Event Logging:**
  - Generator Start / Stop Event logging with Date and Time stamping up to 20 events
  - Max Demand (W, VAr, VA and Current) storage with Date and Time stamping of last event
- **ACCL(Auto Connect Current Limit):**

- current limiter with auto connect feature
- user programmable autoconnect cycles
- connect time 3 sec. and disconnect time 8 sec and hysteresis 2%

- **Custom color setting:** User can assign individual colour for each phase as per the application requirement through display and MODBUS.
- **Phase sequence detection:** Incorrect phase sequence indication or phase failure indication on any of the input voltages.
- **Direct remote access via MODBUS:**
  - Remote access of measured and configuration parameters
  - User Assignable Registers for MODBUS
  - Programmable baud rates up to 38.4kbps
- **Optional Pulse Relay Output:**
  - Potential free, very fast acting relay contact
  - Configurable as pulse output which can be used to drive an external counter for energy measurement.
  - Optional pulse output one for Utility and another for Generator
- **Compliance to International Safety standards:** Compliance to International Safety standard IEC 61010-1-2010
- **EMC Compatibility :** Compliance to International standard IEC 61326

Technical Specifications

Input Current	
Nominal input current	1A/5A AC RMS
System CT primary values	From 1A up to 9999A On site Programmable
Starting Current for energy as per IEC 62053-22 class 0.5S	1 mA for 1A range 5 mA for 5A range
Max continuous input current	120% of Nominal value
Current Measuring Range	5% to 120% of Nominal current.
Overload Withstand	20x times of Nominal current for 1 second, repeated 5 times at 5 min intervals.
Input Voltage	
Nominal input voltage (AC RMS)	57.7 - 288.68 V_{L-N} On site Programmable (Line-Line 100 - 500 V_{L-L})
System PT primary values	100V_{LL} to 692.8 kV_{LL} On site Programmable
Max continuous input voltage	347 V_{LN}, 600 V_{LL}
Voltage Measuring Range	5 V_{LN}.... 347 V_{LN}, 9 V_{LL}....600 V_{LL}.
Overload Withstand	2x times of Nominal voltage for 1 second, repeated 10 times at 10 second intervals
Frequency Measuring Range	45Hz to 66Hz

Auxiliary Supply	
External Aux	60 V – 300V AC-DC
Aux supply frequency	50 / 60 Hz (± 10 %)
VA Burden	
Nominal input voltage burden	< 0.2 VA approx. per phase
Nominal input current burden	< 0.2 VA approx. per phase
Auxiliary Supply burden	< 6.5 VA approx
Real Time Clock(RTC)	
Uncertainty	± 2 minutes / month (23°C ± 1°C)
Display Update Rate	
Response time to step input	1 sec approx.
Operating Measuring Ranges	
Current	5 … 120% of rated value
Voltage	5 … 120% of rated value
Power Factor	0.5 Lag … 1. 0.8 Lead
Frequency	40…70 Hz
Accuracy	
Active Power	±0.2% of Nominal value
Re-Active Power	±0.2% of Nominal value
Apparent Power	±0.2% of Nominal value
Power Factor/Phase Angle	±2°
Voltage	±0.2% of Nominal value
Current	±0.2% of Nominal value
Frequency	±0.1% of Nominal value
Active energy (kWh)	Class 0.5S as per IEC 62053 - 22
Apparent Energy	Class 0.5S as per IEC 62053 – 22
Fundamental Reactive Energy	Class 2 as per IEC 62053 – 23
Harmonics	±1.0%
THD Voltage / Current	±1.0%
Reference conditions (As per. IEC/EN 60688) :	Ambient 23°C ± 1°C Sinusoidal (distortion factor 0.005), 50 / 60 Hz
Overload Withstand	
Voltage	2 x rated value for 1 second, repeated 10 times at 10

	second intervals
Current	20x for 1 second, repeated 5 times at 5 min
Applicable Standards	
EMC	IEC 61326 -1 :2005
Immunity	IEC 61000-4-3. 10V/m min – Level 3 industrial Low level
Safety	IEC 61010-1-2010,Permanently connected use
IP for water & dust	IEC 60529
Pollution degree	2
Installation category	CAT III 300V ac rms
High Voltage Test	5.23 kV DC for 1 minute between all Electrical circuits
Environmental	
Operating temperature	-10 to+55°C
Storage temperature	-20 to+65°C
Relative humidity	0.....90% RH (non condensing)
Warm up time	Minimum 3 minute
Shock	15g in 3 planes
Vibration	10.....150....10 Hz, 0.075mm amplitude
Temperature Coefficient	0.05%/°C
Interfaces	
Impulse Led	At the rear of the instrument with an Impulse constant of 4000impulses/kWh
Relay	Configured as Limit or Pulse/ACCL output
Load Capacity	240 V AC ,5 A
Contact	Change over contact, bistable
ModBus / RTU	RS485,max. 1200m Baud rate: 4.8k, 9.6k, 19.2k, 38.4k bps
Generator sense	
Monitoring generator ON or OFF 10 to 60 VDC / 20 to 300 VAC, 0.3 VA	

Parameter Measurement

Sr No	Displayed Parameters	3 Phase 4Wire	3Phase 3Wire	1 Phase 2Wire
1.	System Voltage	✓	✓	✓
2.	System Current	✓	✓	✓
3.	Volts L1 – N	✓	×	✓
4.	Volts L2 – N	✓	×	×
5.	Volts L3 – N	✓	×	×
6.	Volts L1 – L2	✓	✓	×
7.	Volts L2 – L3	✓	✓	×
8.	Volts L3 – L1	✓	✓	×
9.	Current L1	✓	✓	✓
10.	Current L2	✓	✓	×
11.	Current L3	✓	✓	×
12.	Neutral Current	✓	×	×
13.	Frequency	✓	✓	✓
14.	System Active Power (kW)	✓	✓	✓
15.	Active Power L1 (kW)	✓	×	✓
16.	Active Power L2 (kW)	✓	×	×
17.	Active Power L3 (kW)	✓	×	×
18.	System Fundamental Reactive Power (kVAr)	✓	✓	✓
19.	Fundamental Reactive Power L1 (kVAr)	✓	×	✓
20.	Fundamental Reactive Power L2 (kVAr)	✓	×	×
21.	Fundamental Reactive Power L3 (kVAr)	✓	×	×
22.	System Apparent Power (kVA)	✓	✓	✓
23.	Apparent Power L1 (kVA)	✓	×	✓
24.	Apparent Power L2 (kVA)	✓	×	×
25.	Apparent Power L3 (kVA)	✓	×	×
26.	System Power Factor	✓	✓	✓
27.	Power Factor L1	✓	×	✓
28.	Power Factor L2	✓	×	×
29.	Power Factor L3	✓	×	×
30.	Phase Angle L1	✓	×	✓

31.	Phase Angle L2	✓	×	×
32.	Phase Angle L3	✓	×	×
33.	Utility kWh (Up to 14 digit resolution)	✓	✓	✓
34.	Generator kWh (Up to 14 digit resolution)	✓	✓	✓
35.	Fundamental Utility kVArh	✓	✓	✓
36.	Fundamental Generator kVArh	✓	✓	✓
37.	Utility kVAh	✓	✓	✓
38.	Generator kVAh	✓	✓	✓
39.	Current Demand	✓	✓	✓
40.	Apparent Demand	✓	✓	✓
41.	Active Demand	✓	✓	✓
42.	Reactive Demand	✓	✓	✓
43.	Utility Max Current Demand	✓	✓	✓
44.	Generator Max Current Demand	✓	✓	✓
45.	Utility Max kVA Demand	✓	✓	✓
46.	Generator Max kVA Demand	✓	✓	✓
47.	Utility Max kW Demand	✓	✓	✓
48.	Generator Max kW Demand	✓	✓	✓
49.	Utility Max kVAr Demand	✓	✓	✓
50.	Generator Max kVAr Demand	✓	✓	✓
51.	Utility Run Hour	✓	✓	✓
52.	Generator Run Hour	✓	✓	✓
53.	Utility On Hour	✓	✓	✓
54.	Generator On Hour	✓	✓	✓
55.	Utility Number of Interruption	✓	✓	✓
56.	Generator Number of Interruption	✓	✓	✓
57.	Total Run Hour	✓	✓	✓
58.	Total On Hour	✓	✓	✓
59.	Old Utility Max Current Demand	✓	✓	✓
60.	Old Generator Max Current Demand	✓	✓	✓
61.	Old Utility Max kVA Demand	✓	✓	✓
62.	Old Generator Max kVA Demand	✓	✓	✓
63.	Old Utility Max kW Demand	✓	✓	✓

64.	Old Generator Max kW Demand	✓	✓	✓
65.	Old Utility Max kVAr Demand	✓	✓	✓
66.	Old Generator Max kVAr Demand	✓	✓	✓
67.	Old Utility kWh	✓	✓	✓
68.	Old Generator kWh	✓	✓	✓
69.	Old Utility kVArh	✓	✓	✓
70.	Old Generator kVArh	✓	✓	✓
71.	Old Utility kVAh	✓	✓	✓
72.	Old Generator kVAh	✓	✓	✓
73.	Old Utility Run Hour	✓	✓	✓
74.	Old Utility On Hour	✓	✓	✓
75.	Old Utility Number of Interruptions	✓	✓	✓
76.	Old Generator Run Hour	✓	✓	✓
77.	Old Generator On Hour	✓	✓	✓
78.	Old Generator Number of Interruptions	✓	✓	✓
79.	Old Total Run Hour	✓	✓	✓
80.	Old Total On Hour	✓	✓	✓
81.	Phase Reversal Indication	✓	×	×
82.	Phaser Diagram	✓	×	✓
83.	Voltage Waveform	✓	✓	✓
84.	Current Waveform	✓	✓	✓
85.	% THD Voltage L1-N	✓	×	✓
86.	% THD Voltage L2-N	✓	×	×
87.	% THD Voltage L3-N	✓	×	×
88.	% THD Voltage L1-L2	×	✓	×
89.	% THD Voltage L2-L3	×	✓	×
90.	% THD Voltage L3-L1	×	✓	×
91.	% THD Current L1	✓	✓	✓
92.	% THD Current L2	✓	×	×
93.	% THD Current L3	✓	✓	×
94.	% THD Voltage Mean	✓	✓	×
95.	% THD Current Mean	✓	✓	×
96.	RMS voltage of Harmonics	✓	✓	✓
97.	RMS Current of Harmonics	✓	✓	✓

98.	Fundamental Active Power per phase	✓	×	✓
99.	Fundamental Reactive Power per phase	✓	×	✓
100.	Fundamental Apparent Power per phase	✓	×	✓
101.	Fundamental Power Factor per phase	✓	×	✓
102.	Individual Harmonic Active Power per phase	✓	×	✓
103.	Individual Harmonic Reactive Power per phase	✓	×	✓
104.	Individual Harmonic Apparent Power per phase	✓	×	✓
105.	Distortion Factor of all harmonics on phase voltage	✓	✓	✓
106.	Distortion Factor of all harmonics on phase Current	✓	✓	✓
107.	Power Factor of Individual Harmonic per phase	✓	×	✓
108.	Fundamental voltage RMS per phase	✓	✓	✓
109.	Fundamental current RMS per phase	✓	✓	✓

Connection Diagram and Installation

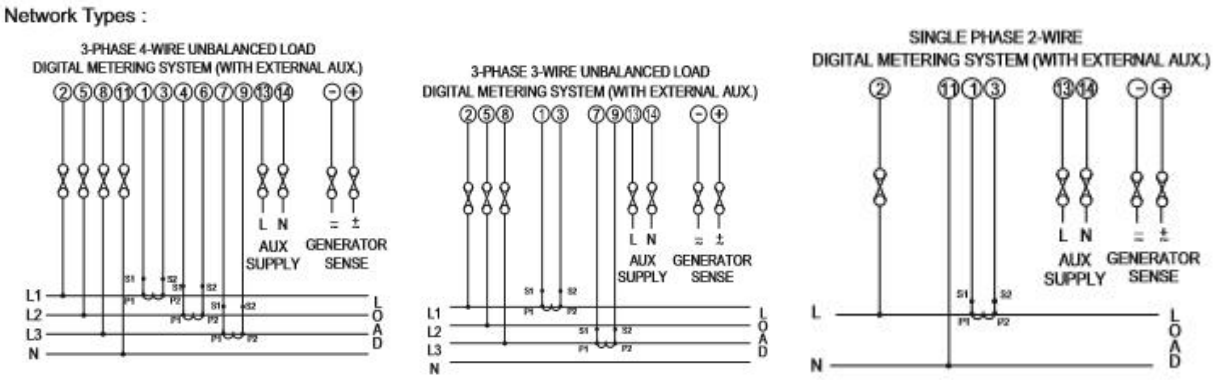

It is recommended that the wires used for connections to the instrument should have lugs soldered at the end. That is, the connections should be made with Lugged wires for secure connections. The Maximum diameter of the lug should be 7.0 mm and maximum thickness 3.5mm.

Dimensions

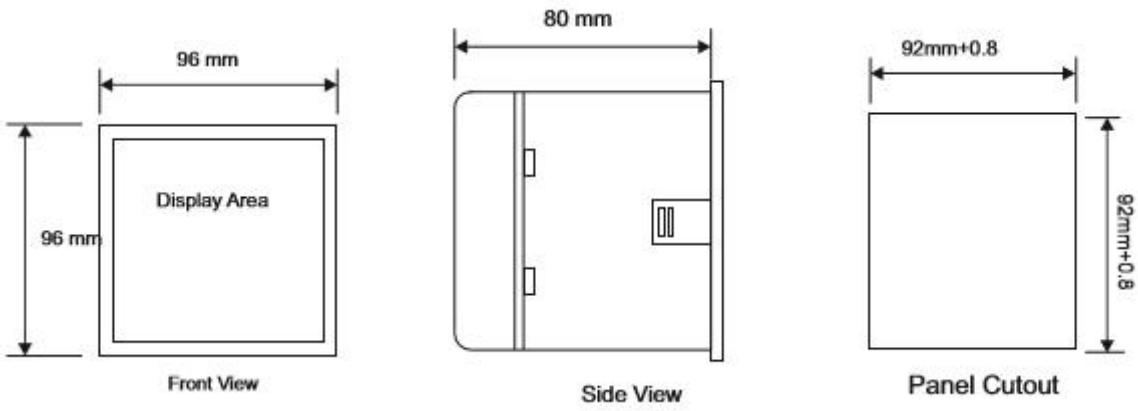

Ordering Information

Ordering information	(✓)
System Type (Connection network)	
3 Phase (onsite programmable to 3PH4W, 3PH3W)	
1 Phase	
Optional:	
MODBUS (RS485) output	
MODBUS Option not used	
With 2-relay output	
Without relay output	

ZAM TC40 1 Phase,,MODBUS (RS485) output, Pulse Output option not used.

Ziegler

Redefine Innovative Metering

Ziegler Instrumentation UK Ltd.

Central Buildings, Woodland close old woods Trading Estate, Torquay Devon, TQ2 7BB, United Kingdom

+441803 616 800 | info@ziegler-instrument.com | ziegler-instrument.com